Continuity tester

E-mail : patkitsrus@gmail.com

Cell / Whatsapp : 071-133-0639

90 Adam Tas Avenue, Bothasig, 7441

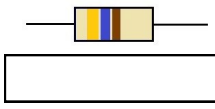

R1 - 470r

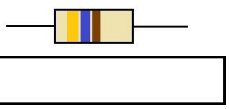

R2 - 470r

Buzzer

Wire - Red - 25cm

Wire - Black - 25cm

Wire - Red - 25cm

Wire - Black - 25cm

On / off switch

On / off switch

Crocodile clips x 2

Crocodile clips x 2

9V Battery clip

9V Battery

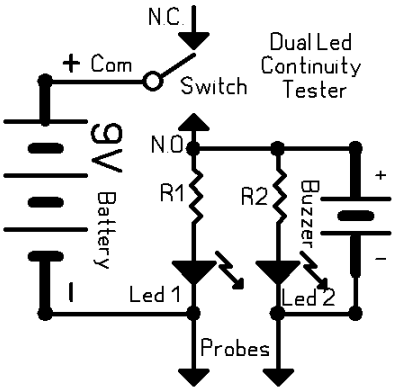

Schematic

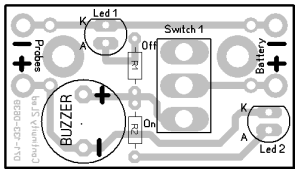

Pcb Overlay

9V Battery clip

9V Battery

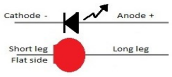

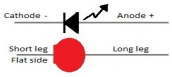

LED 1

LED 2

LED 1

LED 2

Assembly

First a tip on soldering. Use a 40 - 60 Watt soldering iron. The tip must be clean and shiny. Heat up the component as well as the pcb at the same time while applying the solder wire. A good solder joint is smooth and shiny, not lumpy and dull. Thread the red and black wires through the strain-relief holes on the Pcb and solder it to the on the second set of holes. If you just solder them straight in, they will break off very soon. Do the same for the red and black wires from the battery clip. Next fit the two resistors, buzzer, two Leds and the switch. Note that the leds and buzzer are polarity conscious and have to be be put in the right way around. Now solder the black wire to the black crocodile clip and the red wire to the red crocodile clip. Remember to remove the plastic covers on each of the crocodile clips and thread the appropriate black and red wire through them before soldering otherwise you wont be able to put them back in place to the crocodile clips. The switch can be mounted on the Pcb in the three holes provided.

Operation

Fit the battery and switch on. Led 1 should light up now. Then short out the two crocodile clips. Led 2 should light up and the buzzer should sound. If not, recheck your component placement , wiring and soldering. Enjoy your project !